EPPINGER

PRECI-FLEX® Adapter 40, Shrink Fit D8

Part Number 4014-0592

Scope of Delivery **Fixing Screws 0.000.771**
O-Ring 11087

AccessoriesScrew Driver 0.001.078

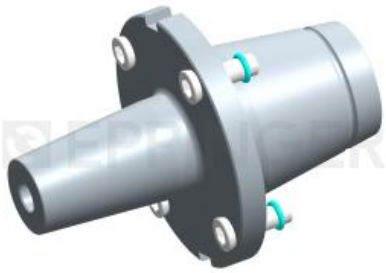

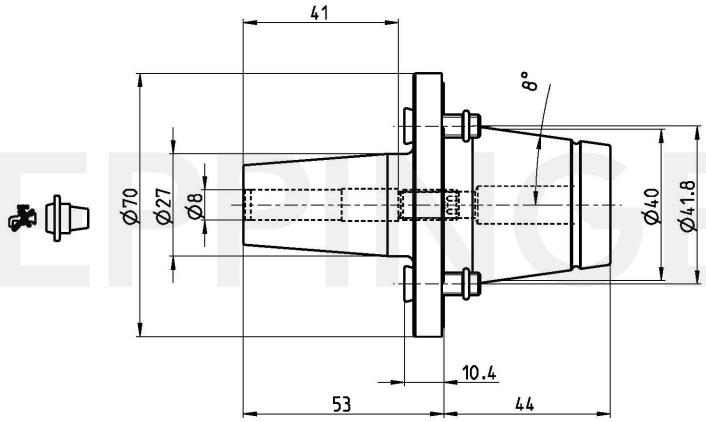

Technical Data Subject to Change

06.03.2013	06.03.2013