PRECI-FLEX® Adapter 40, Weldon extended DIN1835-B12

1034613 / 4004-0200 (ID-No. / Part Number)

Scope of Delivery **Fixing Screws 0.000.771**
O-Ring 11087

Accessories Screw Driver 0.001.078



Availability **available immediately**

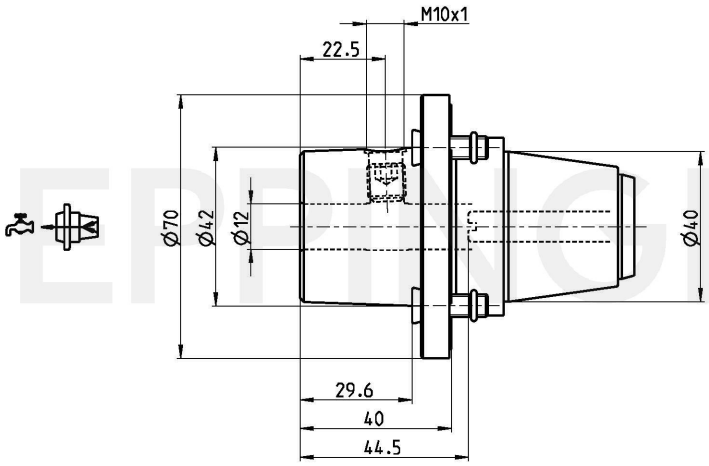

Technical Data Subject to Change 24.08.2012 24.08.2012