EPPINGER

PRECI-FLEX® Adapter 32, Shell Mill Arbor (Transverse Drive) DIN6358-27

Part Number 3207-0331

Scope of Delivery **Fixing Screws 0.000.510**
O-Ring 11086

AccessoriesScrew Driver 0.001.076
Socket Wrench 14451

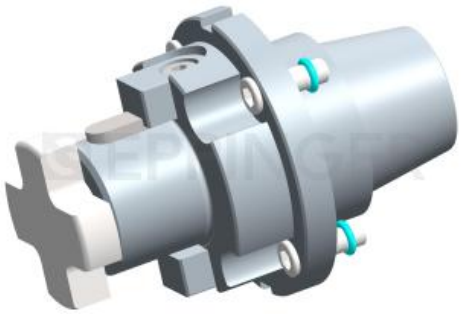

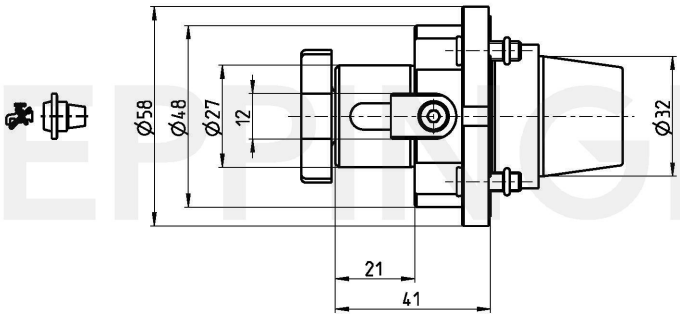

Technical Data Subject to Change

24.08.2012	12.10.2017