EPPINGER

PRECI-FLEX® Adapter 32, Whistle Notch short Standard DIN1835-E8

Part Number 3205-0045

Scope of Delivery **Fixing Screws 0.000.510**
O-Ring 11086

AccessoriesScrew Driver 0.001.076

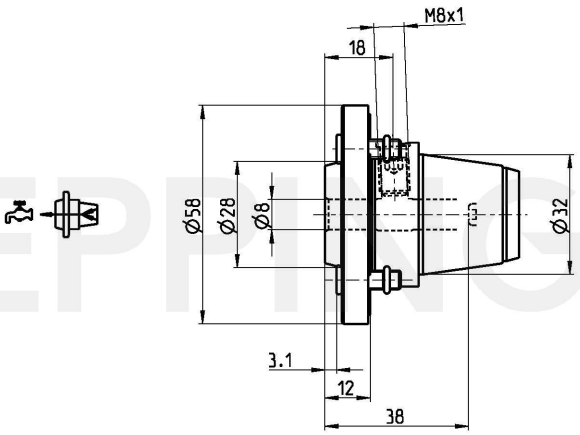

Technical Data Subject to Change

24.08.2012	24.08.2012