EPPINGER

PRECI-FLEX® Adapter 32, Whistle Notch short Standard DIN1835-E8

1034059 / 3205-0045 (ID-No. / Part Number)

Scope of Delivery **Fixing Screws 0.000.510**
O-Ring 11086

Accessories Screw Driver 0.001.076

Availability **upon request**

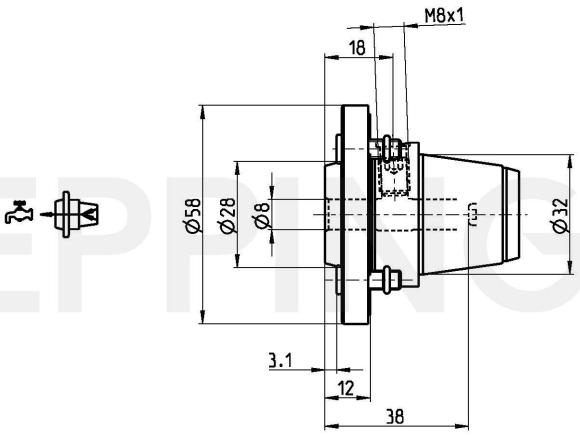

Technical Data Subject to Change 24.08.2012 24.08.2012