PRECI-FLEX® Adapter 32, Weldon short Standard DIN1835-B14

1022953 / 3203-0275 (ID-No. / Part Number)

Scope of Delivery **Fixing Screws 0.000.510**
O-Ring 11086

Accessories Screw Driver 0.001.076



Availability **available immediately**

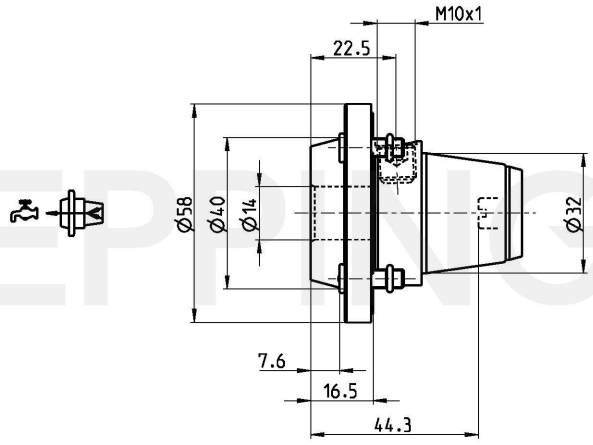

Technical Data Subject to Change 24.08.2012 24.08.2012