PRECI-FLEX® Adapter 25, Whistle Notch extended DIN1835-E12

1034242 / 2506-0074 (ID-No. / Part Number)

Scope of Delivery **Fixing Screws 0.000.510**
O-Ring 11086

Accessories Screw Driver 0.001.076



Availability **upon request**

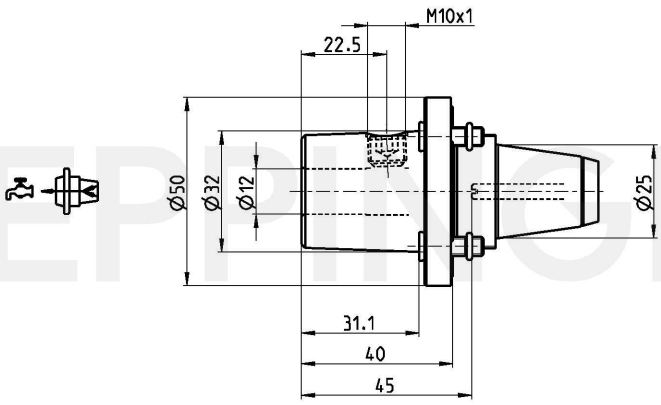

Technical Data Subject to Change 24.08.2012 07.09.2012