EPPINGER

PRECI-FLEX® Adapter 25, Whistle Notch short Standard DIN1835-E10

1034225 / 2505-0068 (ID-No. / Part Number)

Scope of Delivery **Fixing Screws 0.000.510**
O-Ring 11086

Accessories Screw Driver 0.001.076

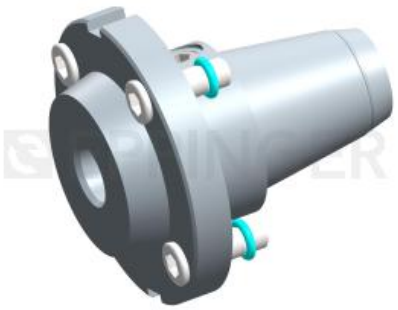

Availability **upon request**

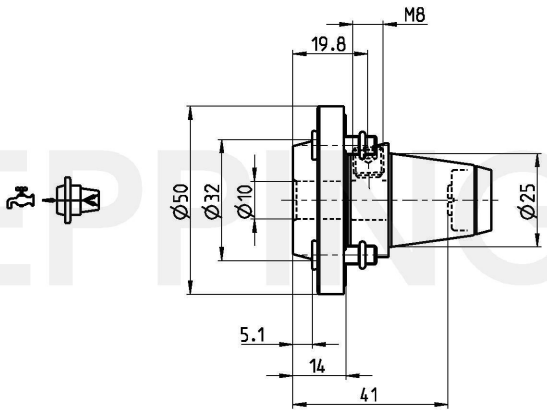

Technical Data Subject to Change 24.08.2012 24.08.2012