EPPINGER

PRECI-FLEX® Adapter 25, Collet Chuck Standard DIN6499 ER16 (426E)

1011290 / 2501-0080 (ID-No. / Part Number)

Scope of Delivery **Fixing Screws 0.000.510**
O-Ring 11086

Accessories Screw Driver 0.001.076

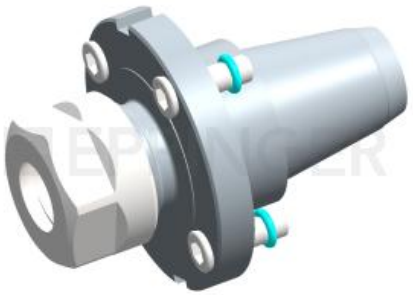

Availability **available immediately**

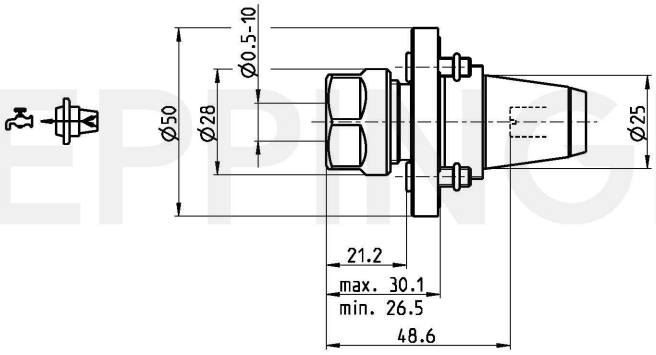

Technical Data Subject to Change 24.08.2012 08.10.2012