EPPINGER

Drilling and milling head, straight, double, adjustable alignment pi

collet chuck, ER25A, PRECI-FLEX®
external and central coolant supply

1017657 / 7.076.070 (ID-No. / Part Number)

for Mazak QTN 300/350/400/450 MSY (II)

Ratio	**1:1**
rpm at Input	**max. 6000 rpm**
rpm at Output	**max. 6000 rpm**
Torque at Output	**max. 35 Nm**
Direction of Rotation	↻↺
Scope of Delivery	**without wrench and collets**
Accessories	Collets see Equipment for Toolholders Z2.1 Sealing washers see Equipment for Toolholders Z4.1 Wrench for spindle 0.002.277 PRECI-FLEX® Adapter Spindle cover see P99.1 Spindle sealing see P99.1 Coolant tubes 0.000.377

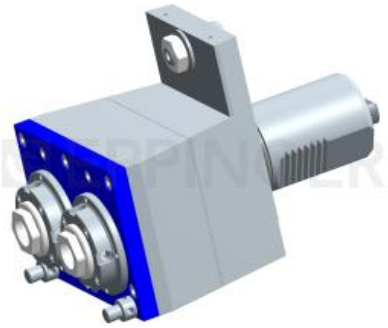

Availability **upon request**

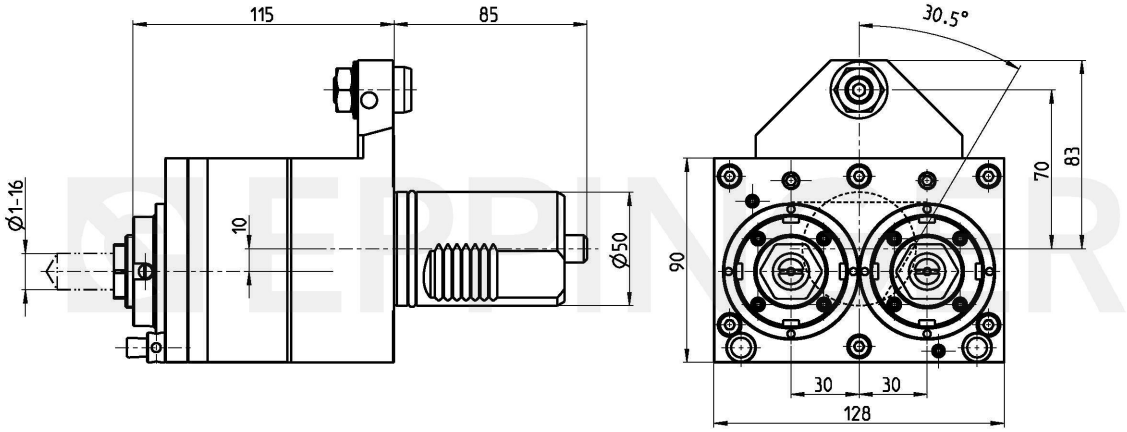

Technical Data Subject to Change 24.07.2012 30.01.2023