Drilling and milling head, straight, double, adjustable alignment pi

collet chuck, ER25A, PRECI-FLEX®
external and central coolant supply

1017548 / 7.076.062 (ID-No. / Part Number)

for Mazak QTN 200/250 MSY (II)

Ratio	**1:1**
rpm at Input	**max. 6000 rpm**
rpm at Output	**max. 6000 rpm**
Torque at Output	**max. 20 Nm**
Direction of Rotation	
Scope of Delivery	**without wrench and collets**

Accessories
Collets see Equipment for Toolholders Z2.1
Sealing washers see Equipment for Toolholders Z4.1
Wrench for spindle 0.002.277
PRECI-FLEX® Adapter
Spindle cover see P99.1
Spindle sealing see P99.1
Coolant tubes 0.000.377

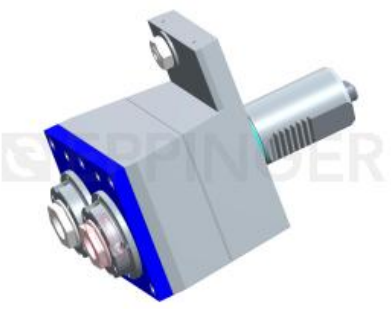

Availability **upon request**

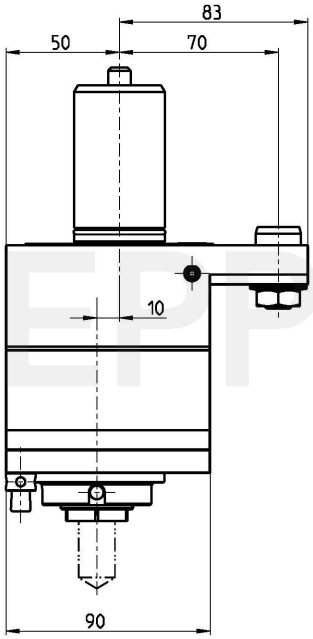

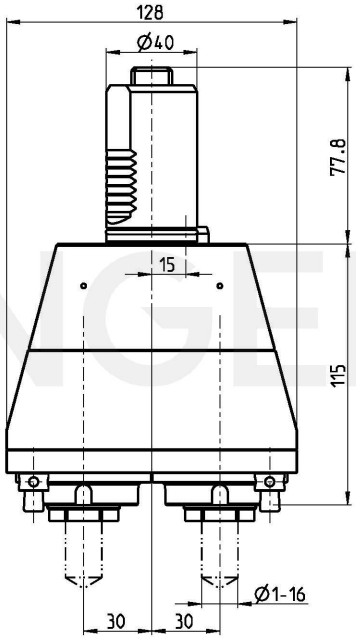

Technical Data Subject to Change 19.04.2012 03.09.2015