EPPINGER

Tool holder, straight, multiple rectangular transverse 32 (1 1/4"), external coolant supply

Part Number **7.076.063**

for **Mazak QTN 300/350/400/450 MSY (II)**

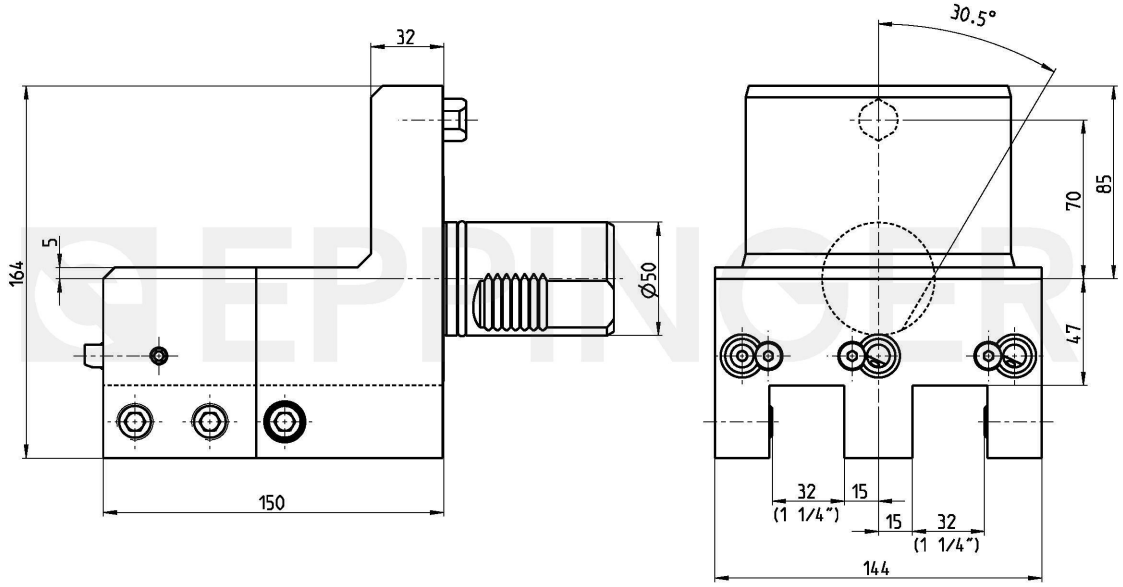

Technical Data Subject to Change

11.04.2012	13.08.2018